BLOWN/PLACED FILTI
DISTURBED ARE

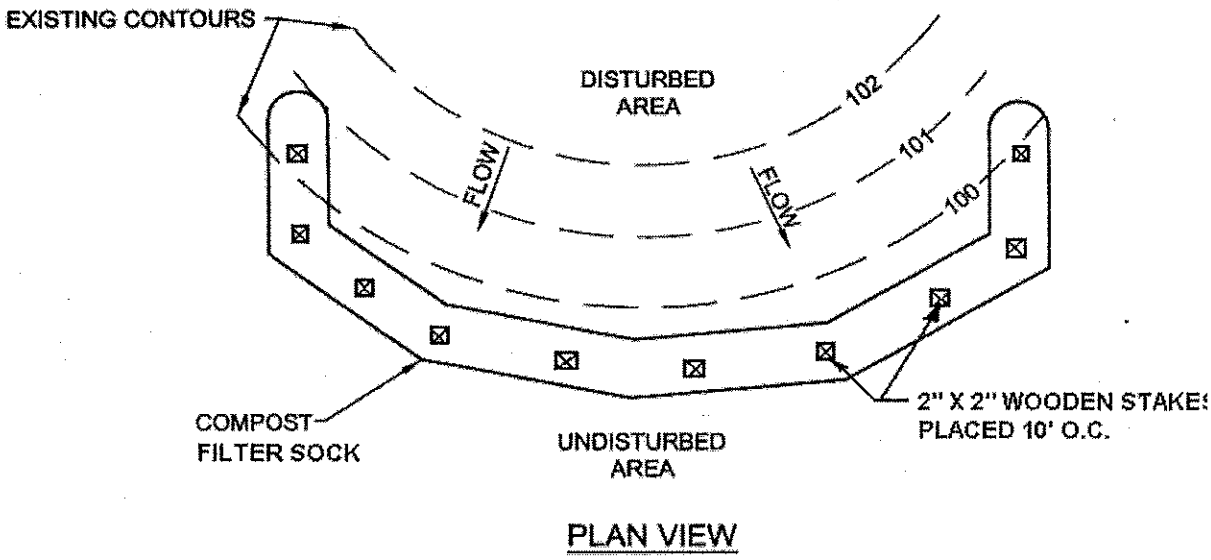

PLAN VIEW

FILTER SOCK INSTALLATION DIAGRAM -
From Erosion and Sediment Pollution Control Program Manual, PADEP, March 2012

MAINTENANCE:

-The sock should be inspected on a regular basis and after each storm

-Remove accumulated sediment when the sediment reaches half the sock height

-If the sock is damaged it must be repaired immediately

STRAW BALES

Another type of perimeter control is straw bales. Straw bales can be an inexpensive way to control of runoff in the form of sheet flow.

ADVANTAGES:

-Relatively inexpensive

-Easy to install

LIMITATIONS:

-Maximum lifespan of straw bales is three months

-Applicable on very small sites only.

-Undercutting is common if not installed correctly

-Use of straw bales is limited based on the slope and length of slope above the bales. See slope/slope length Table below and chart in section 6.

AN EXAMPLE OF STRAW BALES -- Note the sediment accumulation upslope of the bales
From Erosion and Sediment Pollution Control Program Manual, PADEP, March 2012
Courtesy of York County Conservation District

MAXIMUM SLOPE LENGTH FOR USE OF STRAW BALES
(see chart in Section 6 for greater detail)
From Erosion and Sediment Pollution Control Program Manual, PADEP, March 2012

SLOPE PERCENT	MAXIMUM SLOPE LENGTH ABOVE BALES
≤2	150
5	100
10	50
15	35
20	25
25	20
30	15
35	15
40	15
45	10
50	10
>50	NOT PERMITTED

INSTALLATION:

-Install on level grade

-The bottom of the bale should be at least four inches below grade to prevent undercutting

-Butt bales tightly together

-Install 2 stakes per bale. The first stake should be angled toward the adjacent bale to force bales together

-Extend bales at least 8 feet upslope at 45 degree angles to prevent runoff from washing around the ends

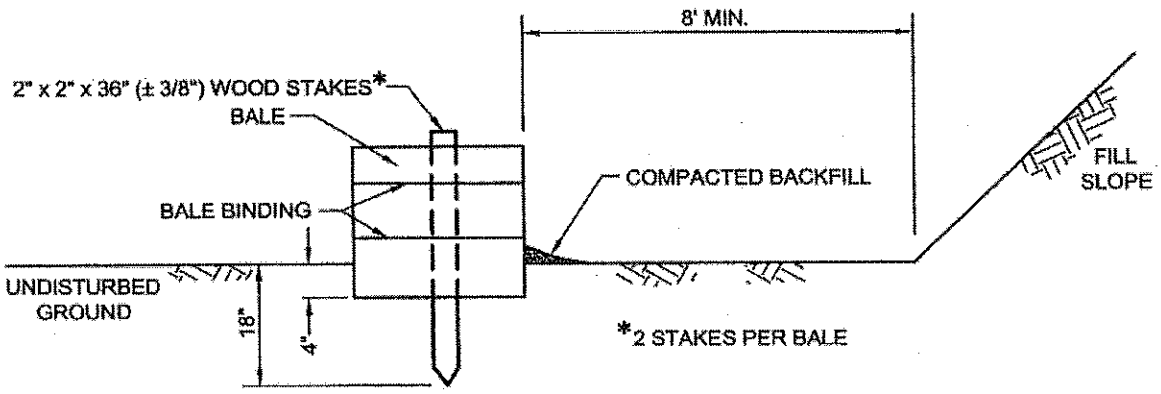

STRAW BALE INSTALLATION DIAGRAM

From Erosion and Sediment Pollution Control Program Manual, PADEP, March 2012

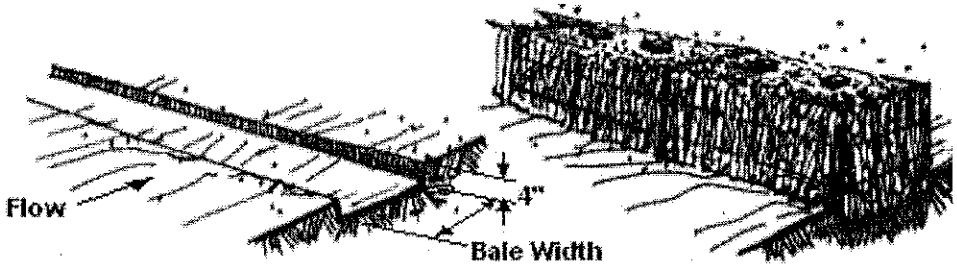

1. EXCAVATE TRENCH

2. PLACE AND STAKE BALES

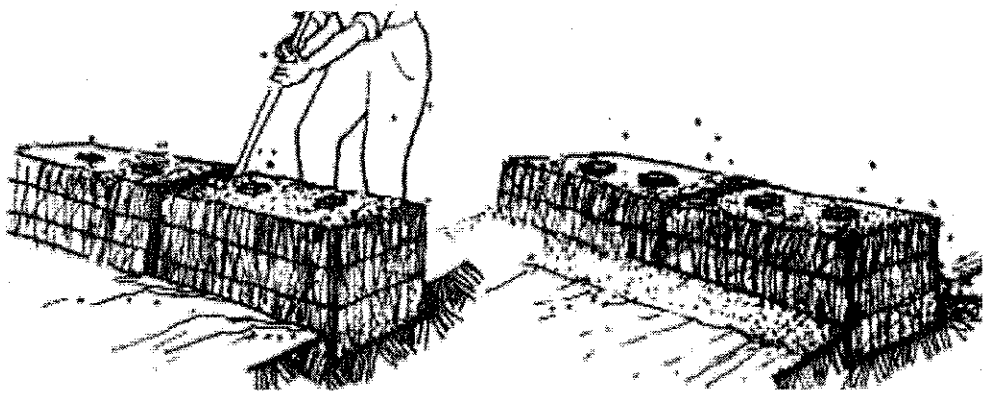

3. WEDGE STRAW IN JOINTS

4. BACKFILL AND COMPACT SOIL

INSTALLATION OF STRAW BALES

From Erosion and Sediment Pollution Control Program Manual, PADEP, March 2012

MAINTENANCE:

-Bales should be inspected on a regular basis and after each storm

-Remove accumulated sediment when the sediment reaches one third of the above ground bale height

-Undercut or overtopped bales may indicate the need for a different BMP

ROCK CONSTRUCTION ENTRANCE

When vehicles and equipment leave construction sites, sediment is often carried with them on tires. This sediment then washes into storm sewers or road side ditches where it is ultimately delivered to streams. A rock construction entrance helps to prevent the sediment from leaving the site by removing sediment from tires.

AN EXAMPLE OF ROCK CONSTRUCTION ENTRANCE - From Erosion and Sediment Pollution Control Program Manual, PADEP, March 2012
Courtesy Lake County Stormwater Management Department, Ohio

ADVANTAGES:

-Relatively inexpensive BMP for vehicular access to the site

-Effective at preventing most sediment transport to adjacent roads or streets

LIMITATIONS:

-Not 100 percent effective. Some sediment will still be transported from the site to roadways

-Must be maintained frequently

-Rock construction entrances are not used to remove sediment from runoff from areas above the entrance

INSTALLATION:

-Topsoil should be removed prior to installing the rock construction entrance

-Place geotextile over existing ground

-Rock should cover the full width of the entrance. Twenty feet is the recommended minimum width

-If a culvert or pipe is needed to convey clean water, a berm is recommended to prevent crushing the pipe

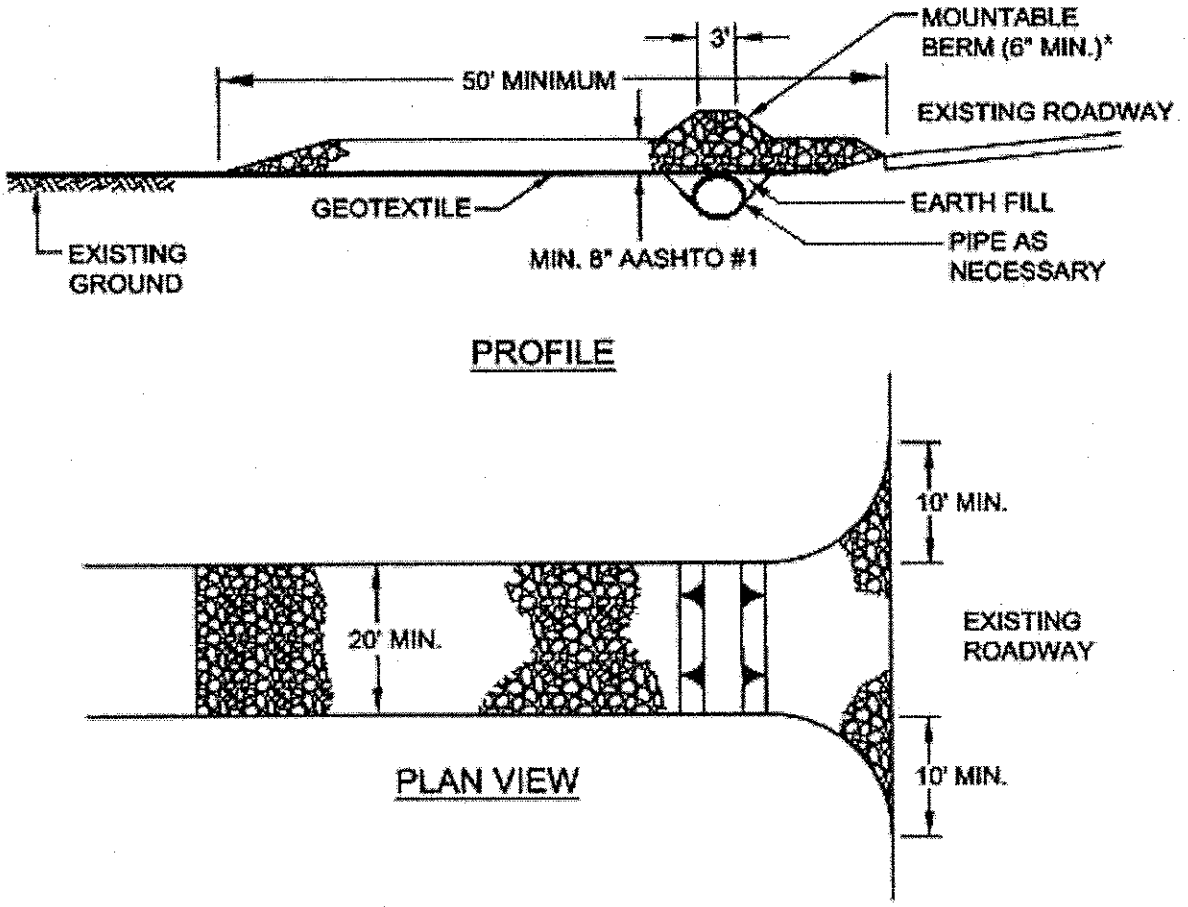

*** MOUNTABLE BERM USED TO PROVIDE PROPER COVER FOR PIPE**

ROCK CONSTRUCTION ENTRANCE DIAGRAM

From Erosion and Sediment Pollution Control Program Manual, PADEP, March 2012

MAINTENANCE:

-Entrance must be maintained to provide the specified depth of rock by adding rock when needed

-A stockpile of rock should be maintained on site for maintenance

-If the entrance becomes completely clogged, the entrance may need to be reinstalled

-Sediment that is deposited on roadways should be returned to the construction site

-Do not wash or sweep sediment on roadways, into gutters, ditches, inlets or other areas where it can be washed into streams or storm sewers

SWALES

Swales are conveyance channels that collect and convey runoff. For small sites, the typical use may be to capture and convey upslope runoff around disturbed areas. Swales are also used to convey runoff from disturbed areas to sediment removal BMPs such as a sediment basin. Swales can be lined with either vegetation or rock.

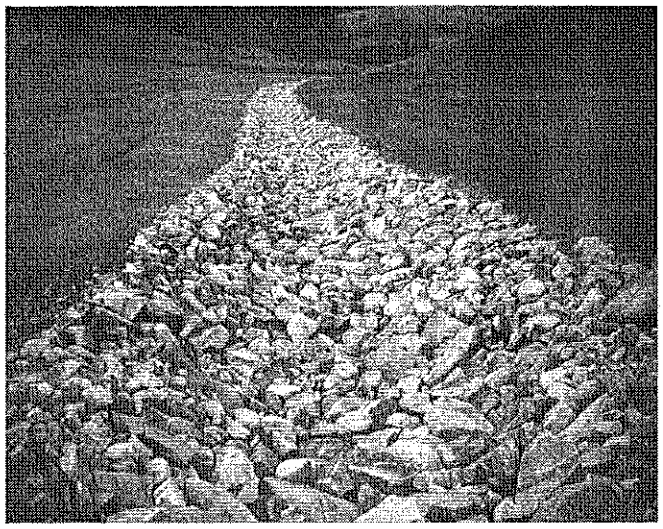

ROCK LINED SWALE - Swales carry runoff safely down a steep slope. From Erosion and Sediment Pollution Control Program Manual, PADEP, March 2012

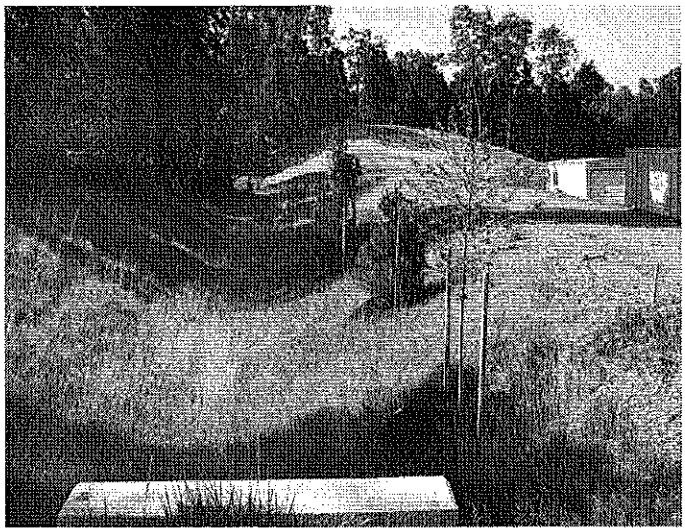

VEGETATED SWALE - Swales can intercept runoff and carry it safely around a project site. Courtesy of Dauphin County Conservation District.

ADVANTAGES:

-Swales can prevent upslope runoff from reaching disturbed areas. This reduces erosion and sediment transport.

-Swales may reduce or eliminate the need for additional controls

LIMITATIONS:

-Swale outlets may need additional stabilization

-Swales may not be practical on some sites

-Swale design may be complex

INSTALLATION:

Installation of swales is dependent on the design. Consult the DEP publication "Erosion and Sediment Pollution Control Program Manual, March 2012" for more information. General installation includes:

- swales should be stabilized immediately after installation

- Unless the sod is to be installed, a fabric will be needed to stabilize the swale until the grass is established

MAINTENANCE:

-Inspect swales frequently

-Damage to swales should be immediately repaired

-Grass should be maintained at two to three inches

-Swales should be cleaned out if channel depth is reduced by 25%

ROCK FILTERS

Rock filters are rock barriers typically used in swales or channels to slow runoff. This reduces the erosion potential of the flow and allows sediment to drop out.

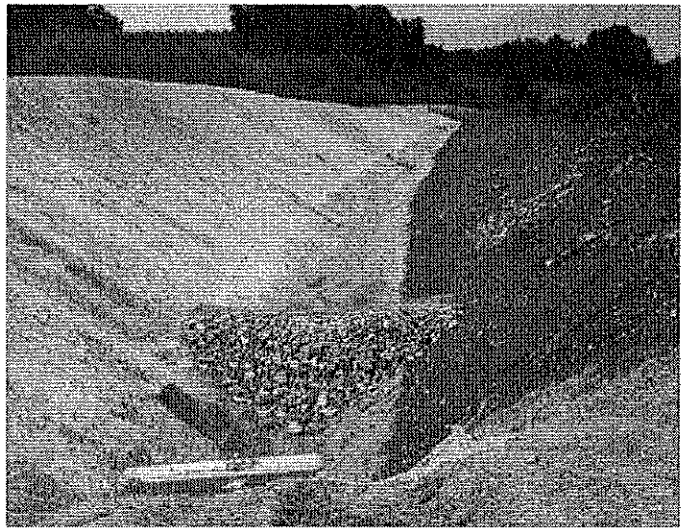

AN EXAMPLE OF A ROCK FILTER - Rock filters, such as the one above can be used to increase efficiency in swales. From Erosion and Sediment Pollution Control Program Manual, PADEP, March 2012
Courtesy of York County Conservation District

ADVANTAGES:

-Rock filters can be used with swales to increase effectiveness

-Relatively inexpensive and easy to construct

LIMITATIONS:

-Rock filters are not a substitute for appropriate channel linings

-Rock filters may not be used where the channel depth is less than two feet

INSTALLATION:

-The filter should be one half the channel depth

-Use R-3 rock for channels up to 3 feet deep

-Use R-4 rock for channels over 3 feet deep

-Construct the filter with a 6 inch depression in the center

-Place a 1 foot thick layer of small rock (AASHTO #57 or smaller) on the upstream side of the filter

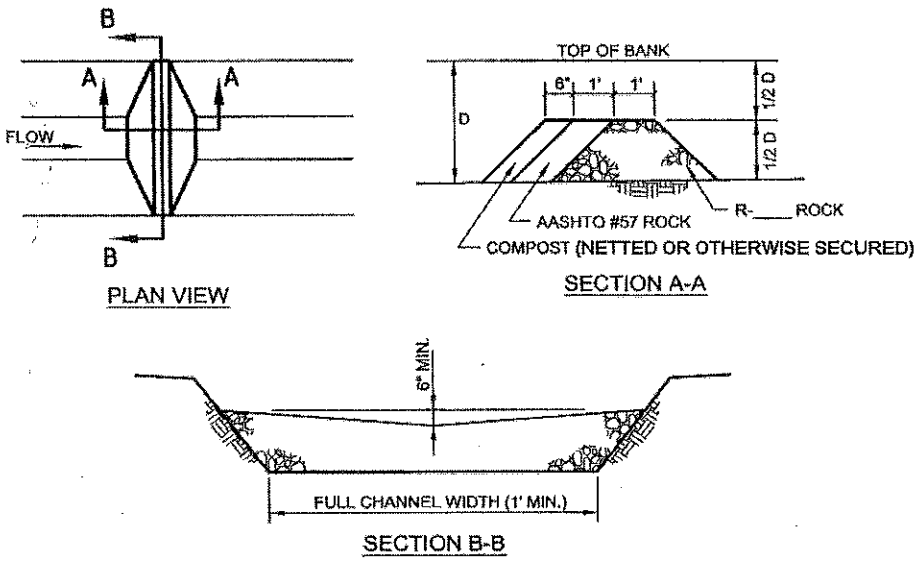

ROCK FILTER DIAGRAM
From Erosion and Sediment Pollution Control Program Manual, PADEP, March

MAINTENANCE:

-Inspect filters weekly and after each rain

-Repair filters immediately if needed

-If the filter is clogged, immediately replace the filter

-Sediment should be removed when it reaches one half the filter height

ROCK OUTLET PROTECTION

Rock outlet protection, also called rip-rap, is used to prevent erosion where channels or pipes discharge.

ADVANTAGES:

-Rock outlet protection is easy to install

-Rock outlet protection is relatively inexpensive

LIMITATIONS:

-Discharge velocity may not exceed 17 feet per second

-Sufficient area must be available for installation

-Must be installed on level grade

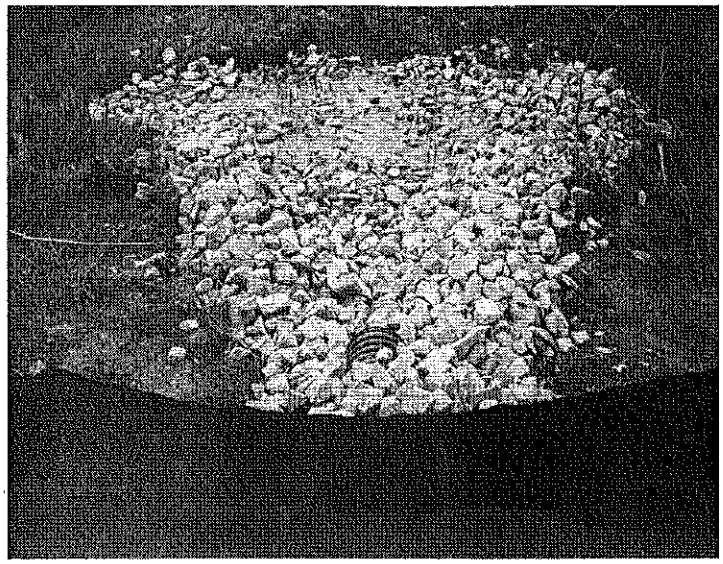

AN EXAMPLE OF ROCK OUTLET PROTECTION - From Erosion and Sediment Pollution Control Program Manual, PADEP, March 2012

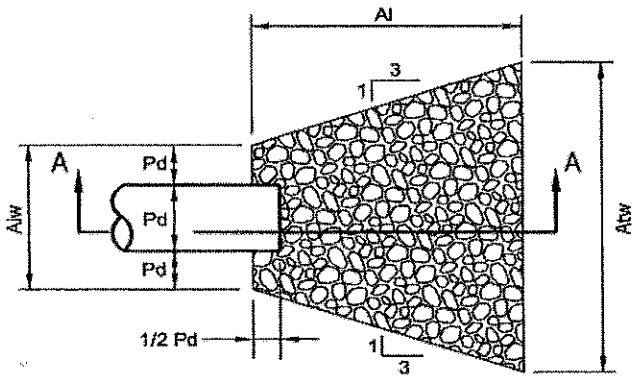

PLAN VIEW

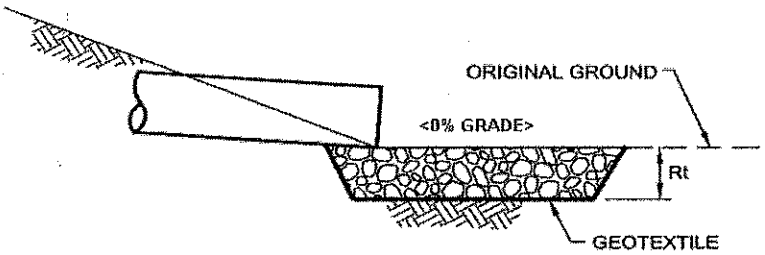

SECTION A - A

ROCK OUTLET PROTECTION DIAGRAM - From Erosion and Sediment Pollution Control Program Manual, PADEP, March 2012

INSTALLATION:

-The diagram to the left is a general construction Diagram. The dimensions and rock size must be determined by calculating the discharge velocity. If not designed and installed correctly, it is likely that erosion will result. Consult the Erosion and Sediment Pollution Control Program Manual, PADEP, March 2012 or contact the Conservation District for guidance.

MAINTENANCE:

-Inspect the outlet protection weekly and after each runoff event

-Replace displaced stone immediately

-Look for evidence of erosion around the structure

SEDIMENT TRAP

A sediment trap is a small ponding area which collects runoff from a disturbed area. Sediment in the collected runoff settles in the trap.

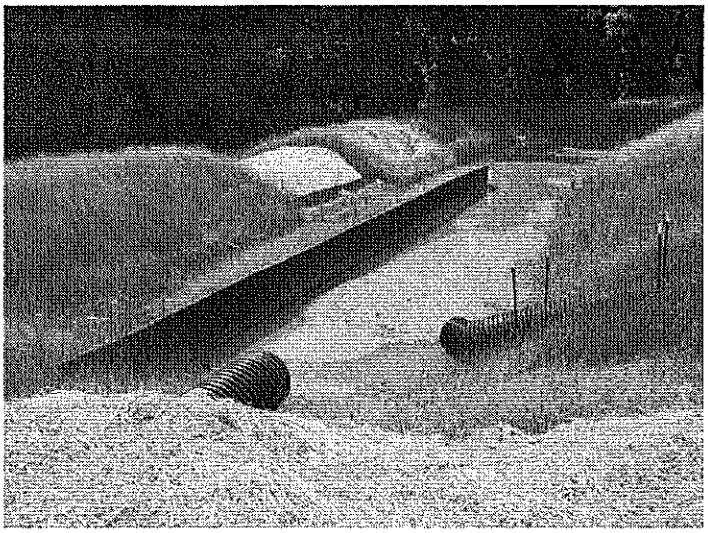

SEDIMENT TRAP - This sediment trap collects runoff from the disturbed site. Note the baffling to increase flow length. From Erosion and Sediment Pollution Control Program Manual, PADEP, March 2012 Courtesy of York County Conservation District

ADVANTAGES:

-Sediment traps are not dependent on slope

-Sediment traps can control areas up to five acres

-Sediment traps are less expensive than detention basins

LIMITATIONS:

-Depending on drainage area, sediment traps may need to be relatively large

-sediment traps should not be located on unstable soils or steep slopes

INSTALLATION:

-Install sediment traps at the downslope most point of the site

-Discharge to a stable, erosion resistant area

-A rock berm may be used for an outlet structure

-The trap must have a minimum of 2,000 cubic feet of storage for each acre contributing runoff to the trap

-Areas with fine textured soils will require 5,300 square feet of surface area for each acre contributing runoff to the trap

-Minimum Flow lengths are 4 to 1 in special protection watersheds and 2 to 1 in other watersheds

-The minimum storage depth is three feet; one foot for sediment storage, one foot for runoff storage and one foot of freeboard

-The maximum embankment height is five feet with maximum slopes of 2H:1V

-Do not use fill material with roots, organic material, large stones or woody vegetation

-Compact the embankment in lifts of 9 inches or less

-Seed and mulch or provide other stabilization upon completion

-Trap should discharge outflow safely to receiving waters without causing erosion

MAINTENANCE:

-Access should be provided for sediment removal and other maintenance activities

-Inspect traps weekly and after each rain

-Replace displaced rock from the outlet structure immediately

-Any damage, erosion or clogging of the components of the trap should be immediately repaired

-Remove sediment from the trap when the sediment storage area is full. A cleanout stake placed in the middle of the trap can be used to determine when to remove sediment

TYPICAL DESIGN ELEMENTS OF A SEDIMENT TRAP

CROSS SECTION

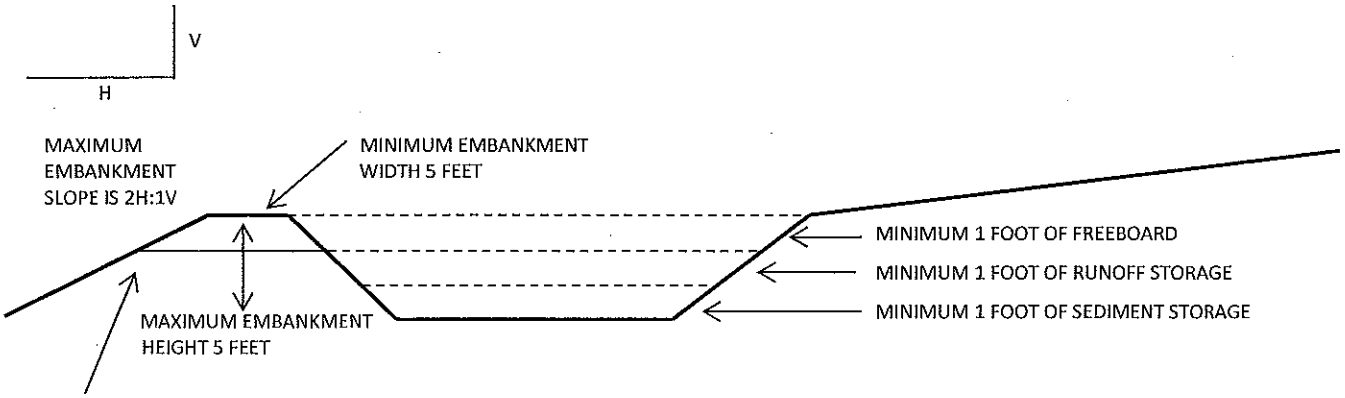

ROCK OUTLET – EXTENDS TO BOTTOM OF TRAP WITH FILTER FABRIC COVERING ROCK TO TOP OF SEDIMENT STORAGE.

PLAN VIEW

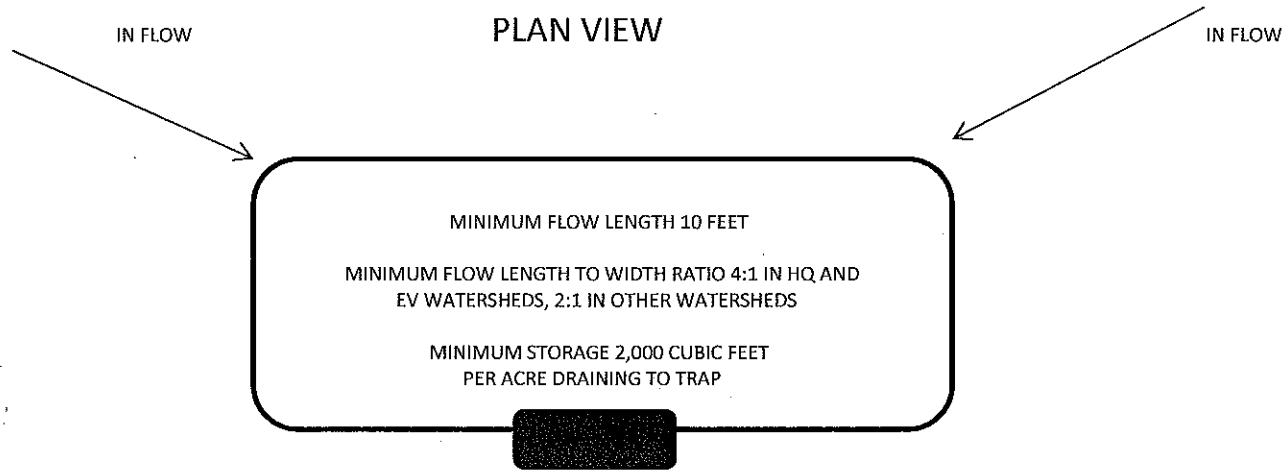

ROCK OUTLET
R-3 ROCK LARGER WITH AASHTO #57 OR SMALLER ON INSIDE

SEDIMENT TRAP SPILLWAY CROSS SECTION

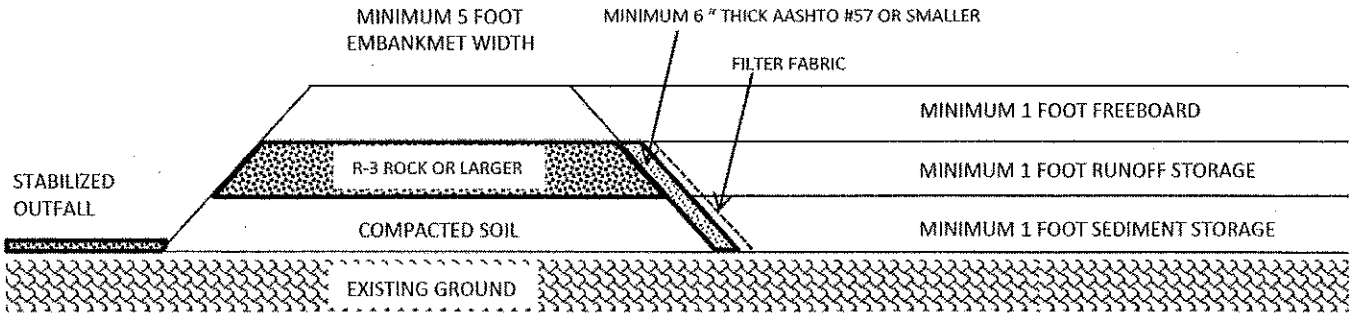

THE ABOVE DIAGRAMS CONTAINS TYPICAL ELEMENTS OF A SEDIMENT TRAP FOR USE ON A SMALL PROJECT SITE. FOR FURTHER GUIDANCE ON DESIGN AND INSTALLATION CONTACT THE CONSERVATION DISTRICT.

INLET FILTER BAG

Inlet filter bags can be used to prevent Sediment from entering storm sewer Systems which discharge to surface waters such as streams or lakes. If the discharge is to a sediment basin or sediment trap, filter bags are not needed.

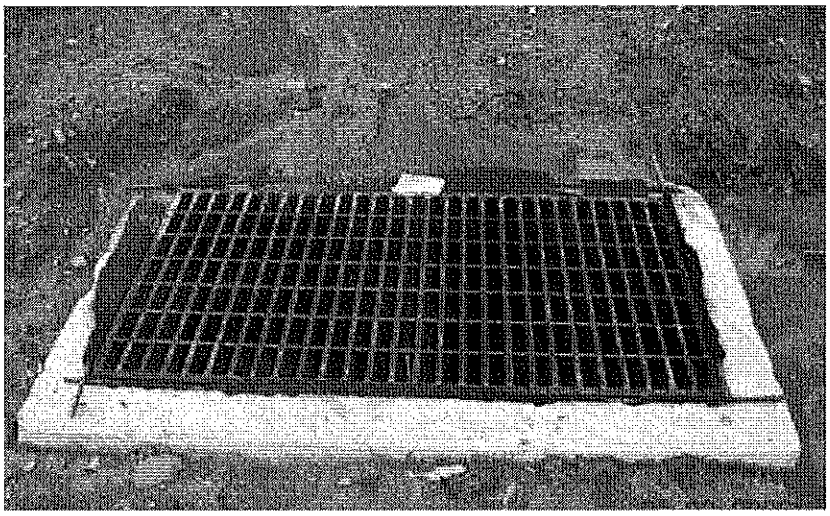

AN EXAMPLE OF AN INLET FILTER BAG - The edges of the bag can be seen around the grate. From Erosion and Sediment Pollution Control Program Manual, PADEP, March 2012
Courtesy Northampton County Conservation District

ADVANTAGES:

-Relatively inexpensive

-Easy to maintain

-Effective when maintained

LIMITATIONS:

-Should not be used on roads where possible ponding could create a traffic hazard

-Maximum drainage area is one half acre

-Not recommended for use at edge of fill slopes

INSTALLATION:

-Fabric tensile strength must be a minimum of 120 pounds

-Burst strength must be a minimum of 200 pounds

-Tear strength must be a minimum of 50 pounds

-Bag must be capable of catching all particles not passing a number 40 sieve (0.4 millimeters)

-Filter bags that fit over the inlet grate are not recommended

-Install according to manufacturer's specifications

-Maintain extra bags on site for replacement

MAINTENANCE:

-Inspect weekly and after each rainfall

-Clean or replace the bag when half full

-Dispose of accumulated sediment properly

-Clean or replace the bag if clogged (indicated by ponding or runoff bypassing inlet)

-Replace torn or damaged bags immediately

-If bag is to be reused, rinse to a sediment trap or basin

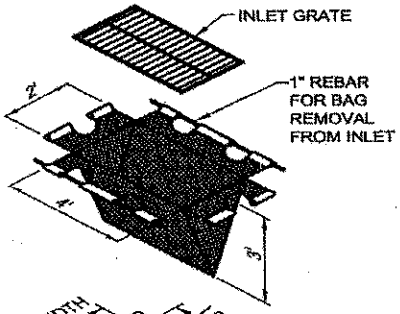

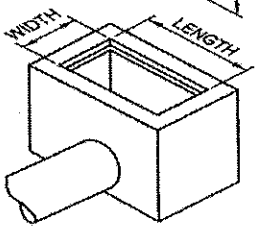

ISOMETRIC VIEW

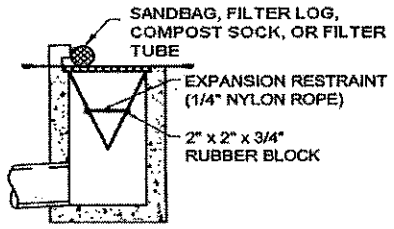

INSTALLATION DETAIL

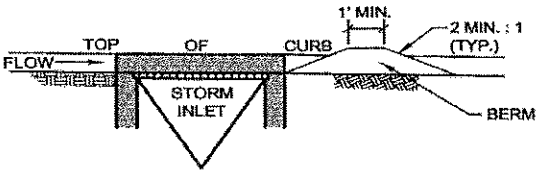

ELEVATION VIEW

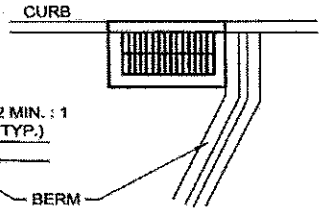

PLAN VIEW

INSTALLATION OF INLET FILTER BAG FOR A TYPE C INLET - Note the blocking of the upper inlet in the Installation Detail to prevent sediment laden runoff from entering the inlet unfiltered. From Erosion and Sediment Pollution Control Program Manual, PADEP, March 2012

NSTALLATION OF INLET FILTER AG FOR A TYPE M INLET -
rom Erosion and Sediment ollution Control Program Manual, PADEP, March 2012

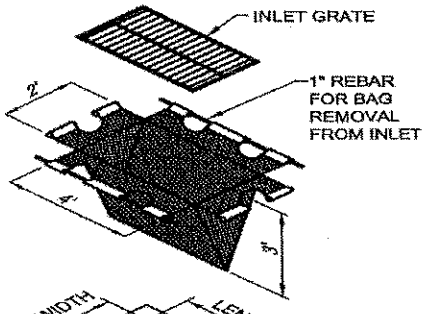

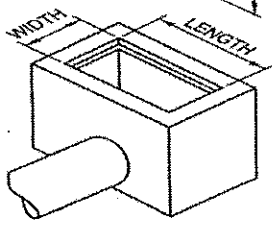

ISOMETRIC VIEW

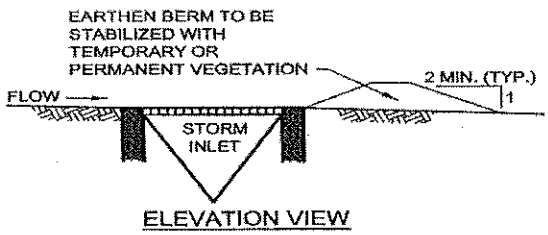

ELEVATION VIEW

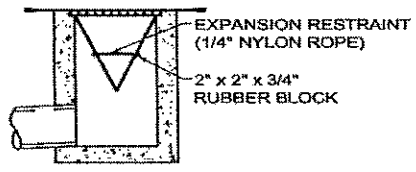

INSTALLATION DETAIL

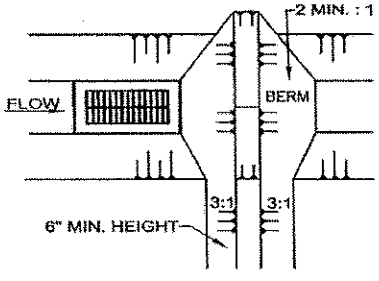

PLAN VIEW

LITERATURE

Erosion and Sediment Pollution Control Program Manual, Pennsylvania EP, March 2012.

Erosion Control and Conservation Plantings on Noncropland, Pennsylvania State University, 1997

The Agronomy Guide, 2013-2014, The Pennsylvania State University, 2013

WEBSITES AND RESOURCES

DEP – www.depweb.state.pa.us

NRCS Soil Survey – http://websoilsurvey.nrcs.usda.gov/app/

Penn State Publications – http://pubs.cas.psu.edu/Publications.asp

Penn State Agronomy Guide – http://pubs.cas.psu.edu/FreePubs/PDFs/agrs026.pdf

Erosion Control and Conservation Plantings on Noncropland -

http://www.dauphincd.org/erosion/EROSION%20AND%20SEDIMENT%20CONTROL%20ON%20NONCROPLAND.**pdf**